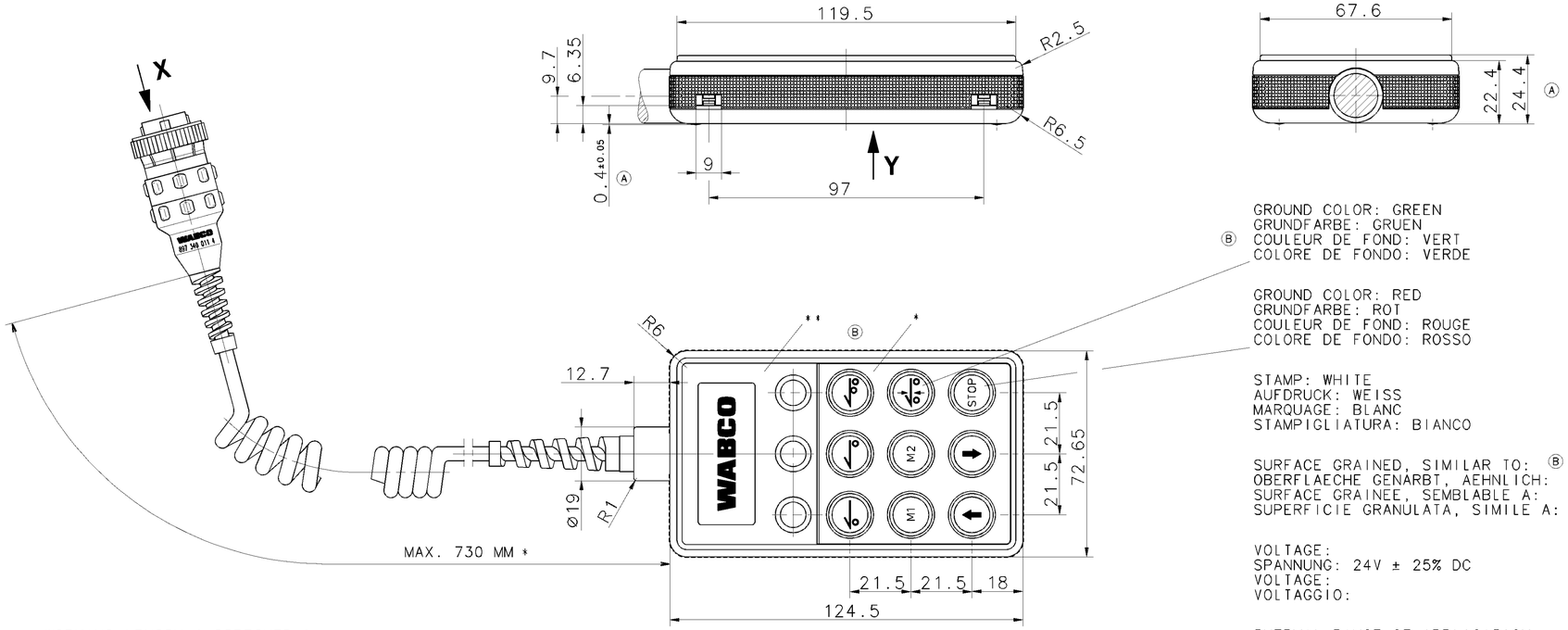

WORKING LENGTH (STRECKED)
* ARBEITSLAENGE (GESTRECKT) MAX. 2000 MM
LONGEURED TRAVAIL (CONNECTE)
LUNGHEZZA DI LAVARO (STESO)

DATE OF MANUFACTURE:
HERSTELLDATUM: JED-226
DATE DE FABRICATION:
DATA DI FABRICAZIONE:

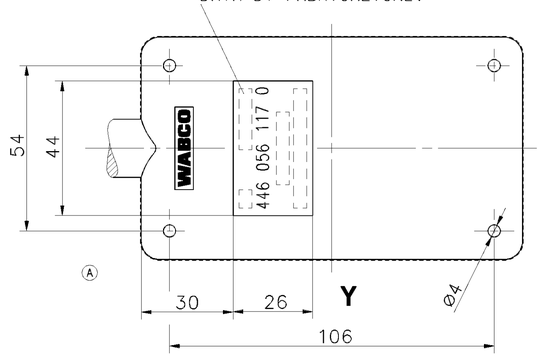

X
2:1

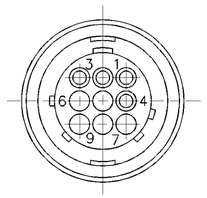

1	+UB	KL.15
2	GROUND MASSE	KL.31
3	CLOCK TAKT	
4	DATA DATEN	

GROUND COLOR: GREEN
GRUNDFARBE: GRUEN
B COULEUR DE FOND: VERT
COLORE DE FONDO: VERDE

GROUND COLOR: RED
GRUNDFARBE: ROT
COULEUR DE FOND: ROUGE
COLORE DE FONDO: ROSSO

STAMP: WHITE
AUFDRUCK: WEISS
MARQUAGE: BLANC
STAMPIGLIATURA: BIANCO

SURFACE GRAINED, SIMILAR TO: B
OBERFLAECHE GENARBT, AEHNLICH: JED-533-035 (VDI 3400 REF. 24) *
SURFACE GRAINEE, SEMBLABLE A: JED-533-038 (VDI 3400 REF. 33) **
SUPERFICIE GRANULATA, SIMILE A:

VOLTAGE:
SPANNUNG: 24V ± 25% DC
VOLTAGE:
VOLTAGGIO:

THERMAL RANGE OF APPLICATION:
THERMISCHER ANWENDUNGSBEREICH -40°C...+70°C
PLAGE DE TEMPERATURE EN UTILISATION:
CAMPO TERMICO DI APPLICAZIONE:

TYPE OF PROTECTION: EXCEPT CONNECTOR
SCHUTZART: IP 64 AUSSER STECKER B
MODE DE PROTECTION: SAUF CONNECTEUR
TIPO DI PROTEZIONE: ECCETTO CONNETTORE

FURTHER TECHNICAL DATA SEE PRODUCT SPECIFICATION
WEITERE TECHNISCHE DATEN SIEHE PRODUKTSPEZIFIKATION
POUR AUTRES DONNEES TECHNIQUES VOIR PRODUCT SPECIFICATION
PER ULTERIORI DATI TECHNICI VERDERE SPECIFICA DI PRODOTTO

GENERAL SPECIFICATION: JED-334
FURTHER TECHNICAL DATA:
DOC. CODE: SHEET: TO

GENERAL TOLERANCES

CLASS 1)	RANGE OF NOMINAL DIMENSIONS (± mm) ≤50	>50 ≤180	>180 ≤400	>400	∢
FINE	0,5	1,0	1,5	2,0	
MEDIUM #	1,0	2,0	3,0	4,0	± 3°
COARSE	2,0	3,5	5,0	6,5	

TAPPED HOLES ACC. ISO 4039 / JED-152
1) TOLERANCE CLASS APPLIED CROSSMARKED

DCN-NO.	REV.	DATE
072315	4xB	99-11-24
071251	3xA	99-05-03

CADAM-DRAWING COPYRIGHT
DATE SIGNATURE
DRAWN: 97-12-03 PFENNIG
CHECKED: 97-12-03 MEIER
STANDARDIZATION:

WABCO

CONTROL ELEMENT
BEDIENEINHEIT
ELEMENT DE COMMANDE
ELEMENTO DI COMANDO

MASS	SCALE	PRODUCT IDENTIFICATION NO.	DOC. CODE	SHEET
0.30 KG	1:1 2:1	446 056 117 0	605	1/1
SIZE A 1	I.R.I. 142			

SHAPE CODE REPLACEMENT FOR

100mm EXPERT CODE 7 5 7 PRODUCT TYPE

V000/016/3/04.93
605/653

VOUS COMMUNICATION OU REPRODUCTION DE CE DOCUMENT, TOUTE EXPLOITATION OU COMMUNICATION DE SON CONTENU OU REMISE A DES TIERS SONT INTERDITES SAUF AUTORISATION ECRITE. TOUS DROITS DE PROPRIETE INTELLECTUELLE RESERVES.
WE REPRODUCE, DISTRIBUTE OR TRANSMIT THIS DOCUMENT, OR PERMIT THE USE OF THE CONTENTS OR GIVE IT TO OTHERS AND THE USE OR COMMUNICATION OF THE CONTENTS THEREOF, WITHOUT OUR EXPRESS AUTHORITY TO DO SO. WE RESERVE ALL RIGHTS IN THIS DOCUMENT AND IN THE INFORMATION CONTAINED THEREIN.
WIR BEHALTEN UNS DIE RECHTE VOR, DIESES DOKUMENT OHNE UNSERE AUSDRUCKLICHE ERMACHTIGUNG WEDER VERVIELFALTIGEN, VERBREITEN UND MITTEILUNG IHRES INHALTS NICHT GESTATTEN, SOWIE NICHT HIERMIT OHNE ZUSTIMMUNG ZUM GEBRAUCH UNBEFUGT ZUGANGLICH MACHEN. ALLE RECHTE AUSDRUCKLICH VORBEHALTEN.
COPYING OF THIS DOCUMENT AND GIVING IT TO OTHERS AND THE USE OR COMMUNICATION OF THE CONTENTS THEREOF, ARE NOT PERMITTED WITHOUT EXPRESS AUTHORITY. OFFENDERS ARE LIABLE TO PAY COMPENSATION. ALL RIGHTS ARE RESERVED IN THE EVENT OF THE GRANT OF PATENT OR REGISTRATION OF A UTILITY MODEL OR DESIGN.
NON E PERMESSO CONSENTIRE A TERZI O RIPRODURRE QUESTO DOCUMENTO, NE UTILIZZARE IL CONTENUTO O RENDERLO ACCESSIBILE A TERZI SENZA NOSTRA AUTORIZZAZIONE. TUTTI I DIRITTI DI PROPRIETA' INTELLETTUALE RISERVATI.
DOPO LA PUBBLICAZIONE DI UN BREVETTO O DI UN MODELLO DI UTILITA' O DI UN DISEGNO INDUSTRIALE RIMANGONO RISERVATI I DIRITTI DERIVANTI DA