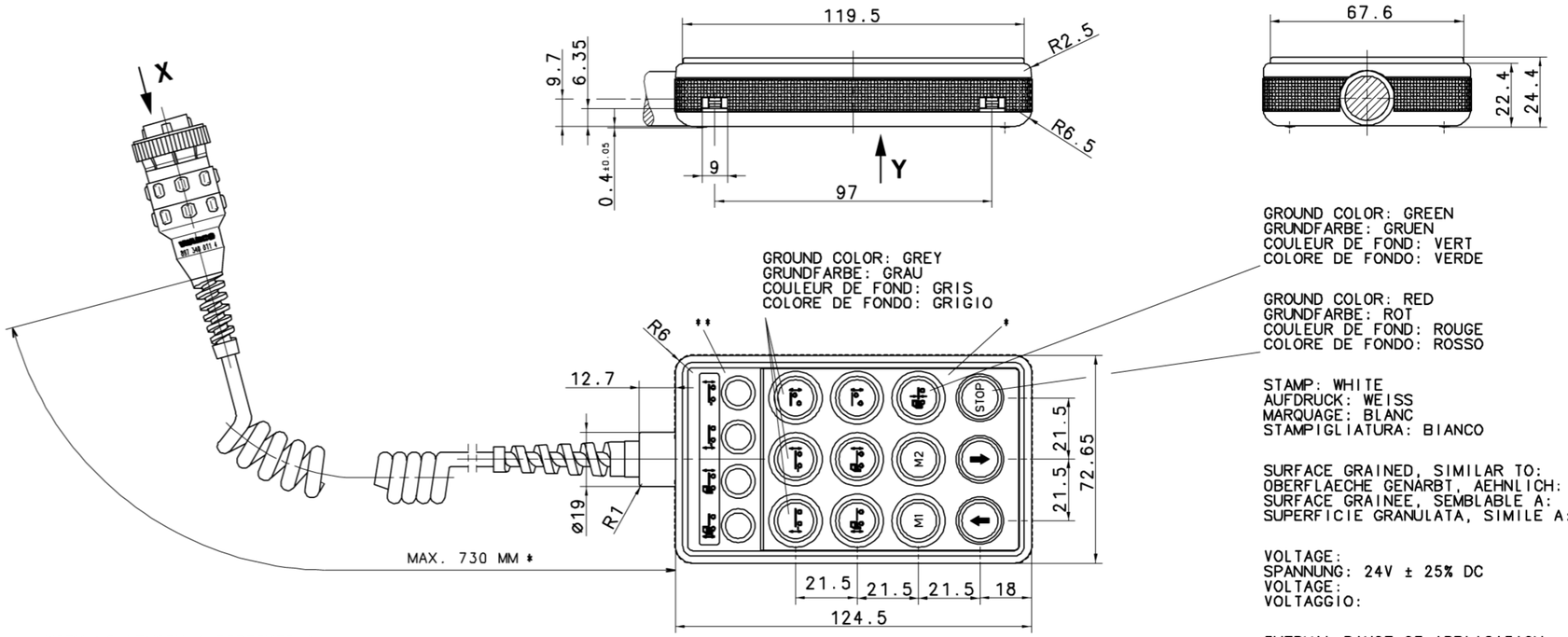

GROUND COLOR: GREEN
GRUNDFARBE: GRUEN
COULEUR DE FOND: VERT
COLORE DE FONDO: VERDE

GROUND COLOR: RED
GRUNDFARBE: ROT
COULEUR DE FOND: ROUGE
COLORE DE FONDO: ROSSO

STAMP: WHITE
AUFDRUCK: WEISS
MARQUAGE: BLANC
STAMPIGLIATURA: BIANCO

SURFACE GRAINED, SIMILAR TO:
OBERFLAECHE GENARBT, AEHNLICH: JED-533-035 (VDI 3400 REF. 24) *
SURFACE GRAINEE, SEMBLABLE A: JED-533-038 (VDI 3400 REF. 33) **
SUPERFICIE GRANULATA, SIMILE A:

VOLTAGE:
SPANNUNG: 24V ± 25% DC
VOLTAGE:
VOLTAGGIO:

THERMAL RANGE OF APPLICATION:
THERMISCHER ANWENDUNGSBEREICH -40°C...+70°C
PLAGE DE TEMPERATURE EN UTILISATION:
CAMPO TERMICO DI APPLICAZIONE:

TYPE OF PROTECTION: EXCEPT CONNECTOR
SCHUTZART: IP 64 AUSSER STECKER
MODE DE PROTECTION: SAUF CONNECTEUR
TIPO DI PROTEZIONE: ECCETTO CONNETTORE

FURTHER TECHNICAL DATA SEE PRODUCT SPECIFICATION
WEITERE TECHNISCHE DATEN SIEHE PRODUKTSPEZIFIKATION
POUR AUTRES DONNEES TECHNIQUES VOIR PRODUCT SPECIFICATION
PER ULTERIORI DATI TECHNICI VERDERE SPECIFICA DI PRODOTTO

WORKING LENGTH (STRECKED)
* ARBEITSLAENGE (GESTRECKT) MAX. 2000 MM
LONGEUREDE TRAVAIL (CONNECTE)
LUNGHEZZA DI LAVARO (STESO)

DATE OF MANUFACTURE:
HERSTELLDATUM: JED-226
DATE DE FABRICATION:
DATA DI FABRICAZIONE:

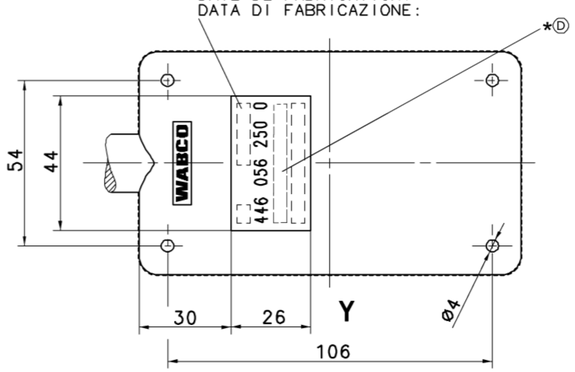

INSPECTION MARK:
Ⓓ * PRUEFZEICHEN: (E1) 10R-047633
MARQUE DE CONTROLE:
STAMPA DI COLLAUDO:

X
2:1

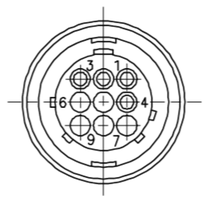

1	+UB	KL.15 KL.30
2	GROUND MASSE	KL.31
3	CLOCK TAKT	
4	DATA DATEN	

GENERAL SPECIFICATION:	JED-334	
FURTHER TECHNICAL DATA:		
DOC. CODE:	SHEET:	10

GENERAL TOLERANCES

CLASS 1)		RANGE OF NOMINAL DIMENSIONS (± mm) ≤50	> 50 ≤180	>180 ≤400	>400	∢
FINE		0,5	1,0	1,5	2,0	
MEDIUM	*	1,0	2,0	3,0	4,0	± 3°
COARSE		2,0	3,5	5,0	6,5	

TAPPED HOLES ACC. ISO 4039 / JED-152

1) TOLERANCE CLASS APPLIED CROSSMARKED

DON-NO.	REV.	DATE
164444	2xD	15-03-30
111723	1xC	06-12-12
093481	1xB	05-02-02
089770	2xA	04-09-14

100mm

CADAM-DRAWING COPYRIGHT

DATE	SIGNATURE
DRAWN: 01-12-12	PFENNIG
CHECKED: 01-12-12	MEIER
STANDARDIZATION:	

WABCO

CONTROL ELEMENT
BEDIENEINHEIT
ELEMENT DE COMMANDE
ELEMENTO DI COMANDO

MASS	SCALE	PRODUCT IDENTIFICATION NO.	DOC. CODE	SHEET
0.30 KG	1:1 2:1	446 056 250 0	605	1/1
SIZE A 1	T.R.I. 620		SHAPE CODE	REPLACEMENT FOR

EXPERT CODE 0 4 7

PRODUCT TYPE 0 2 X

1509/018/3/04-03

035/653